Engines
Available with either Perkins 1004.42 diesel or GM V6-4.36 LPG industrial water cooled engines developed specifically for lift truck applications. Engines are designed to meet the strict EU emission regulations.

The diesel engine is naturally aspirated and has direct fuel injection for fuel economy and low emissions. The LPG version High Energy Ignition (HEI) system eliminates the need to service the points, increases spark plug life and provides easier starting.

Low governed engine speeds and accurately matched drive lines provide low fuel consumption and prolonged engine life.

Large diameter engine air cleaner and air intake located near top of overhead guard reduces frequency of cleaning and ensures a long filter element life. A warning light indicates when filter requires cleaning.

Cooling System
The large radiator provides cooling to cope with heavy duty applications. Unique core design reduces tendency to clog in dusty or fibrous applications.

Electrical System
12 volt system with heavy duty starter battery, alternator with integral regulator and enclosed starter motor. Lock out system prevents engagement of starter motor when engine is running.

Transmission
The Yale automatic transmission has two forward speeds and one reverse speed. Forward direction gear change is fully automatic with microprocessor electronic control at optimum travel speeds to provide smooth change and prolong drive line and tyre life. Second gear isolation switch prevents speeding in confined areas. Torque converter matches engine to traction power requirements to provide smooth traction performance. Separate, filtered hydraulic system includes, oil cooler located in radiator to ensure efficient performance and low maintenance. The fully floating axle design ensures tyre loads are carried by the axle housing. Drive wheels can be quickly removed without disturbing the wheel bearings.

Brakes
Heavy duty independent service and parking brakes act on the front wheels. Power assisted high performance braking is achieved with low pedal effort. Brakes are asbestos free and are self energising and self adjusting.

Dual hydraulic circuits maintain braking in the event of a single circuit failure. A warning lamp indicates when the brake fluid drops below the predetermined level. The brake assemblies can be accessed for service without disturbing drive axle shafts.

The parking brake is operated by a lever located on left hand side of steer column.

Hydraulic System
A single hydraulic pump provides power for mast functions and steering. Integral hydraulic tank incorporates easily removed full flow return line filter. The control valve includes dual pressure relief valves to protect the lift and auxiliary circuits from overload and anti-cavitation to prevent voids in the tilt cylinders and improve tilt control.

Steering
Full hydrostatic steering provides low effort and high manoeuvrability.

The steer axle, with integrated cylinder, is mounted into the chassis via isolastic rubber bushes providing insulation for the driver from rear wheel shocks.

Mast
The Yale range of masts provides a rigid structure with generous overlap. Channels, lift chains and cylinders are widely spaced to provide outstanding visibility.

The masts feature pre-lubricated and sealed, full radius angled load rollers, that resist forward, backward and lateral forces. These give load support during lifting and tilting and eliminate the need for additional side thrust rollers. The full radius corner contact reduces channel wear and frequency of servicing.

Cushioned lift cylinders incorporate check valves to provide safe controlled lowering in the unlikely event of a hose failure. The hook type fork carriage has extra large picture window for maximum visibility.

Operators Compartment, Controls and Instrumentation
A spacious and comfortable operators compartment with low height step and handgrip for easy access. Unique, variable spring engine mounts and operator compartment isolating bushes minimise structure transmitted noise and vibration to the operator.

Automotive controls include, accelerator pedal, direction control lever mounted on left hand side of steer wheel and combined inching/brake pedal. Hydraulic control levers are sited adjacent to the operators seat for ease of operation and reduced driver fatigue. The gated auxiliary levers promote safety by preventing unintentional load release with clamp attachments.

The ergonomically positioned steer wheel incorporates spinner knob and central horn button. The steer column is a adjustable for rake with 4 positive lockable positions.

A compartment, with hinged lid, provides ample storage for driver's requisites.

The "at a glance" microprocessor controlled dash display is mounted to the right of the steer wheel and angled towards the operator for easy viewing. Extensive warning lights and gauges provide complete control and information on all vital truck systems. The gauges are backlit for brighter imaging. Engine shutdown system to protect against low oil pressure and high engine coolant temperature is fitted as standard. Keyless password entry system can be activated at customer's request.

The Standard full suspension seat with soft moulded cushions and armrests is fully adjustable to suit every operator.

Options
Alternative options; e.g. cab, lighting groups, attachments are available.

CE **Safety.** This truck conforms to the current EU requirements. Specification is subject to change without notice

Yale Europe Materials Handling
Flagship House, Reading Road North,
Fleet, Hampshire GU51 4WD, United Kingdom.
Tel: + 44 (0) 1252 770700 Fax: + 44 (0) 1252 770780
www.yale-europe.com

Yale is a registered trade mark.
Publication part no. 258725670 Rev.4 Printed in The United Kingdom (080220HG) EN

LJ/MJ

Models GDP/GLP 35LJ, 40LJ, GDP/GLP 45MJ, 50MJ, 55MJ

- 3500kg, 4000kg, 4500kg, 5000kg, 5500kg Diesel and LP Gas lift trucks
- Supercushion and Pneumatic tyres
- Focus on driver comfort and low operating costs
- Satisfies a wide range of industries and applications

Truck shown with optional equipment

Main advantages of the LJ/MJ range

Operator focus

- Fully adjustable full suspension seat with moulded cushions and armrests
- Spacious operator compartment with low open step and hand grip for easy access
- Smooth, automatic gear change
- Unique, anti noise and vibration engine and operator module mounts
- "At a glance" dash display

Low user costs

- Low service cost and down time with 500 hour service intervals
- Engine protection system
- High engine air intake

Industry and application versatility

- Range of capacities and models
- Clean burn Diesel and LPG engines
- Compact dimensions

Truck Dimensions

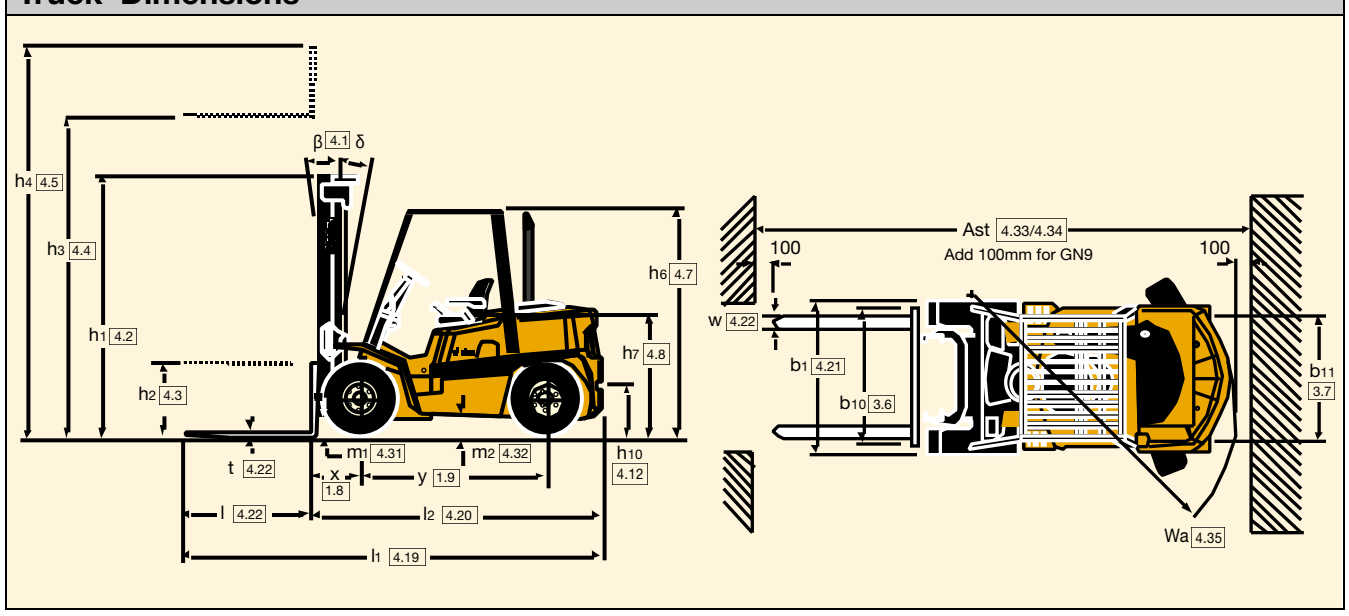

Mast details and capacity ratings (kg) - Supercushion tyres

Model							35 LJ						40 LJ					
Tyres							250 x 15						250 x 15					
Width across tyres							1402 mm						1402 mm					
Mast	OAH				Tilt		Forks			Integral Sideshift			Forks			Integral sideshift		
							500	600	700	500	600	700	500	600	700	500	600	700
	h1	FFH	MFH	h4	F	B	LC	LC	LC	LC	LC	LC	LC	LC	LC	LC	LC	LC
2-Stg. LFL (V)	2171	150	3100	3864	6	12†	3500	3400	3120	3500	3240	2980	4000	3860	3540	4000	3690	3390
	2471	150	3700	4464	6	12†	3500	3380	3100	3500	3220	2960	4000	3840	3530	4000	3670	3380
	2771	150	4300	5064	6	12	3500	3360	3090	3500	3210	2950	4000	3830	3510	4000	3660	3360
	3221	150	5000	5764	6	6	3380	3220	2950	3360	3070	2820	3870	3670	3370	3840	3510	3230
	3621	150	5600	6364	6	6	3240	3060	2810	3190	2910	2680	3720	3510	3220	3660	3350	3080
	4021	150	6200	6964	6	6	3090	2890	2650	3010	2750	2530	3550	3320	3050	3470	3170	2920
2-Stg. FFL (F)	2171	1380	3100	3864	6	12†	3500	3260	3000	3400	3110	2870	4000	3710	3410	3880	3550	3270
	2471	1680	3700	4464	6	12†	3500	3240	2980	3380	3100	2850	4000	3690	3400	3860	3540	3260
3-Stg. FFL (E)	2171	1380	4415	5227	6	6	3500	3210	2960	3380	3090	2850	4000	3660	3370	3860	3530	3250
	*2271	1480	4715	5527	6	6	3440	3150	2900	3310	3030	2790	3940	3600	3310	3790	3470	3190
	2371	1580	4950	5762	6	6	3390	3100	2850	3250	2980	2740	3880	3540	3260	3730	3410	3140
	2471	1680	5250	6062	6	6	3320	3030	2780	3180	2910	2680	3800	3470	3190	3650	3340	3080
	2571	1780	5550	6362	6	6	3240	2950	2720	3100	2840	2620	3710	3390	3120	3570	3270	3010
	2771	1980	6000	6812	6	6	3110	2840	2610	2980	2730	2510	3570	3260	3000	3430	3140	2900

Mast details and capacity ratings (kg) - Supercushion tyres

Model							45 MJ			50 MJ				55 MJ			
Tyres							300 x 15			300 x 15				300 x 15			
Width across tyres							1450 mm			1450 mm				1450 mm			
Mast	OAH				Tilt		Forks			Forks		Integral Sideshift		Forks		Integral Sideshift	
							500	600	700	600	700	600	700	600	700	600	700
	h1	FFH	MFH	h4	F	B	LC	LC	LC	LC	LC	LC	LC	LC	LC	LC	LC
2-Stg. LFL (V)	2214	160	2850	3776	6	12†	4500	4500	4190	5000	4820	5000	4620	5500	5300	5500	5080
	2514	160	3450	4376	6	12†	4500	4500	4190	5000	4810	4980	4600	5500	5290	5480	5070
	2814	160	4050	4976	6	12	4500	4500	4190	5000	4790	4970	4590	5500	5270	5470	5050
	3264	160	4750	5676	6	6	4500	4390	4190	4880	4650	4820	4450	5370	5120	5310	4910
	3664	160	5350	6276	6	6	4500	4250	4190	4730	4480	4640	4290	5210	4950	5130	4740
	4064	160	5950	6876	6	6	4450	4090	4090	4560	4300	4460	4120	4650	4650	4710	4560
2-Stg. FFL (F)	2214	1263	2850	3776	6	12†	4500	4500	4190	5000	4790	4960	4590	5500	5270	5460	5050
	2514	1563	3450	4376	6	12†	4500	4500	4190	5000	4780	4950	4570	5500	5250	5450	5030
3-Stg. FFL (E)	2214	1263	4145	5126	6	6	4500	4500	4190	5000	4740	4910	4540	5500	5210	5410	5000
	*2314	1363	4445	5426	6	6	4500	4450	4190	4950	4680	4850	4490	5440	5150	5350	4940
	*2414	1463	4700	5681	6	6	4500	4400	4190	4890	4620	4790	4430	5380	5090	5280	4880
	2514	1563	5000	5981	6	6	4500	4330	4190	4820	4540	4710	4350	5310	5010	5200	4800
	2614	1663	5300	6281	6	6	4500	4260	4120	4740	4460	4630	4280	5230	4920	5110	4720
	2814	1863	5750	6731	6	6	4100	4100	3990	4120	4120	4150	4150	4060	4060	4110	4110

*These masts are subject to special enquiry. †6° back tilt required with cab

Yale

VDI 2198 - General Specifications

Characteristics	1.1	Manufacturer		Yale	Yale	Yale	Yale	Yale	Yale	Yale	Yale	Yale	Yale
	1.2	Model designation		**GDP 35 LJ**	**GDP 40 LJ**	**GDP 45 MJ**	**GDP 50 MJ**	**GDP 55 MJ**	**GLP 35 LJ**	**GLP 40 LJ**	**GLP 45 MJ**	**GLP 50 MJ**	**GLP 55 MJ**
	1.3	Power: Electric, Diesel, LPG		Diesel	Diesel	Diesel	Diesel	Diesel	LPG	LPG	LPG	LPG	LPG
	1.4	Type of control - Stand-on, rider seated		R. Seated	R. Seated	R. Seated	R. Seated	R. Seated	R. Seated	R. Seated	R. Seated	R. Seated	R. Seated
	1.5	Carrying capacity/Load	Q (kg)	3500	4000	4500	5000	5500	3500	4000	4500	5000	5500
	1.6	Load centre	c (mm)	500	500	500	600	600	500	500	500	600	600
	1.8	Load distance	x (mm)	516	516	574	584	584	516	516	574	584	584
	1.9	Wheelbase	y (mm)	1830	1830	2100	2100	2100	1830	1830	2100	2100	2100
Weights	2.1	Weight	kg	5540	5830	6660	7030	7280	5540	5830	6660	7030	7280
	2.2	Axle loadings laden, front/rear	kg	8015 / 1025	8730 / 1100	9885 / 1475	10740 / 1280	11450 / 1330	8015 / 1025	8730 / 1100	8835 / 1475	10740 / 1290	11450 / 1330
	2.3	Axle loadings unladen, front/rear	kg	2570 / 2970	2510 / 3320	2860 / 3800	2820 / 4110	2850 / 4430	2570 / 2870	2510 / 3320	2880 / 3800	2820 / 4110	2850 / 4430
Wheels & Tyres	3.1	Tyres - C=Cushion, SC=Supercushion, P= Pneumatic		SC	SC	SC	SC	SC	SC	SC	SC	SC	SC
	3.2	Tyre size - front		250x15	250x15	300x15	300x15	300x15	250x15	250x12	300x15	300x15	300x15
	3.3	Tyre size - rear		7.00x12	7.00x12	7.00x12	7.00x15	7.00x15	7.00x12	7.00x12	7.00x12	7.00x15	7.00x15
	3.5	Wheels - number front/rear (X = driven)		2 X / 2	2 X / 2	2 X / 2	2 X / 2	2 X / 2	2 X / 2	2 X / 2	2 X / 2	2 X / 2	2 X / 2
	3.6	Track width - front	b_{10} (mm)	1152	1152	1150	1150	1150	1152	1152	1150	1150	1150
	3.7	Track width - rear	b_{11} (mm)	1135	1135	1135	1143	1143	1135	1135	1135	1143	1143
Dimensions	4.1	Mast tilt angle, forward/backward	degrees	6 / 12	6 / 12	6 / 12	6 / 12	6 / 12	6 / 12	6 / 12	6 / 12	6 / 12	6 / 12
	4.2	Height, mast lowered	h_1 (mm)	2171	2171	2514	2514	2514	2171	2171	2514	2514	2514
	4.3	Free lift	h_2 (mm)	100	100	110	100	100	100	100	110	100	100
	4.4	Lift height	h_3 (mm)	3050	3050	3400	3390	3390	3050	3050	3400	3390	3390
	4.5	Height, mast raised	h_4 (mm)	3864	3864	4376	4376	4376	3864	3864	4376	4376	4376
	4.7	Height to top of overhead guard	h_6 (mm)	2272	2272	2320	2350	2350	2272	2272	2320	2350	2350
	4.8	Seat height	h_7 (mm)	1110	1110	1153	1171	1171	1110	1110	1153	1171	1171
	4.12	Coupling height	h_{10} (mm)	500	500	500	548	548	500	500	500	548	548
	4.19	Overall length	l_1 (mm)	3828	3891	4242	4311	4353	3828	3891	4242	4331	4353
	4.20	Length to front face of forks	l_2 (mm)	2890	2934	3251	3311	3353	2890	2934	3251	3331	3353
	4.21	Overall width, Single / Dual	b_1 (mm)	1402 / 1780	1402 / 1780	1450 / 1875	1450 / 1875	1450 / 1875	1402 / 1780	1402 / 1780	1450 / 1875	1450 / 1875	1450 / 1875
	4.22	Fork dimensions	s/e/l (mm)	50 / 125 / 1000	50 / 125 / 1000	50 / 125 / 1000	60 / 150 / 1000	60 / 150 / 1000	50 / 125 / 1000	50 / 125 / 1000	50 / 125 / 1000	60 / 150 / 1000	60 / 150 / 1000
	4.23	Fork carriage to DIN 15173, Class/form A, B		IIIA	IIIA	IIIA	IVA	IVA	IIIA	IIIA	IIIA	IVA	IVA
	4.24	Fork carriage width	b_3 (mm)	1201	1201	1354	1201	1201	1201	1201	1354	1201	1201
	4.31	Ground clearance beneath mast, laden	m_1 (mm)	125	125	171	171	171	125	125	171	171	171
	4.32	Ground clearance, centre of wheelbase	m_2 (mm)	183	183	200	219	219	183	183	200	219	219
	4.33	Aisle width for pallets 1000 x 1200 wide	Ast (mm)	4238	4269	4618	4686	4727	4238	4269	4618	4686	4727
	4.34	Aisle width for pallets 800 x 1200 long	Ast (mm)	4438	4469	4818	4886	4927	4438	4469	4818	4886	4927
	4.35	Outer turning radius	Wa (mm)	2522	2553	2844	2902	2943	2522	2553	2844	2902	2943
	4.36	Inner turning radius	b_{13} (mm)	43	43	153	153	153	43	43	153	153	153
Performance	5.1	Travel speed, laden/unladen	km/h	23.5 / 24.8	23.5 / 24.8	23.3 / 23.8	23.3 / 23.8	23.3 / 23.8	23.5 / 24.8	23.5 / 24.8	23.3 / 23.8	23.3 / 23.8	23.3 / 23.8
	5.2	Lifting speed, laden/unladen	m/s	0.54 / 0.59	0.54 / 0.58	0.40 / 0.43	0.40 / 0.43	0.40 / 0.43	0.58 / 0.59	0.58 / 0.59	0.42 / 0.43	0.42 / 0.43	0.42 / 0.43
	5.3	Lowering speed, laden/unladen	m/s	0.54 / 0.48	0.54 / 0.48	0.40 / 0.41	0.47 / 0.41	0.47 / 0.41	0.54 / 0.48	0.54 / 0.48	0.48 / 0.41	0.47 / 0.41	0.47 / 0.41
	5.5	Rated drawbar pull, laden/unladen (60 min)	N	29800 / 15300	29700 / 14700	29600 / 18000	29500 / 18800	28400 / 18600	31500 / 15300	31400 / 14700	31000 / 18000	30800 / 18800	30800 / 18800
	5.6	Max. drawbar pull, laden/unladen (5 min)	N	35300 / 15300	35200 / 14700	35100 / 18000	35000 / 18800	34900 / 19600	37500 / 15300	37400 / 14700	37600 / 18000	37500 / 18800	37400 / 19800
	5.7	Gradeability, laden/unladen (30 min)	%	38.5 / 27.5	33.1 / 25.1	28.4 / 28.3	26.3 / 28.0	24.4 / 27.8	39.0 / 27.5	35.4 / 25.1	29.9 / 28.3	27.8 / 28.0	25.7 / 27.8
	5.8	Max. gradeability, laden/unladen (5 min)	%	44.8 / 27.5	40.3 / 25.1	34.6 / 28.3	31.9 / 28.0	29.6 / 27.8	47.9 / 27.5	43.2 / 25.1	37.0 / 28.3	34.1 / 28.0	31.8 / 27.8
	5.9	Acceleration time, laden/unladen (10 m)	sec	4.4 / 3.8	4.5 / 3.8	4.7 / 4.0	4.9 / 4.1	5.1 / 5.2	4.3 / 3.7	4.4 / 3.8	4.7 / 3.9	4.8 / 4.0	5.0 / 4.1
	5.10	Service brakes		Hydr. Power	Hydr. Power	Hydr. Power	Hydr. Power	Hydr. Power	Hydr. Power	Hydr. Power	Hydr. Power	Hydr. Power	Hydr. Power
Engine	7.1	Engine manufacturer/type		Perkins 1004.4	Perkins 1004.4	Perkins 1004.4	Perkins 1004.4	Perkins 1004.4	GMV6-4.36	GMV6-4.36	GMV6-4.36	GMV6-4.36	GMV6-4.36
	7.2	Engine output, in accordance with ISO1585	kW	58.7	58.7	58.7	58.7	58.7	63.3	63.3	63.3	63.3	63.3
	7.3	Governed speed	min^{-1}	2200	2200	2200	2200	2200	2200	2200	2200	2200	2200
	7.4	Number of cylinders/displacement	cm^3	4 / 4200	4 / 4200	4 / 4200	4 / 4200	4 / 4200	6 / 4300	6 / 4300	6 / 4300	6 / 4300	6 / 4300
	7.5	Fuel consumption in accordance with VDI cycle	l/h or kg/h	3.37 (l/hr)	3.37 (l/hr)	4.0 (l/hr)	4.0 (l/hr)	4.0 (l/hr)	3.41 (kg/hr)	3.41 (kg/hr)	3.94 (kg/hr)	3.94 (kg/hr)	3.94 (kg/hr)
Other	8.1	Drive control		Automatic	Automatic	Automatic	Automatic	Automatic	Automatic	Automatic	Automatic	Automatic	Automatic
	8.2	Operating pressure for attachments	bar	0-155	0-155	0-155	0-155	0-155	0-155	0-155	0-155	0-155	0-155
	8.3	Oil flow for attachments	l/min	91	91	108	108	108	91	91	108	108	108
	8.4	Sound pressure at operator's ear	(dBA)	78	78	78	78	78	78	78	78	78	78
		Guaranteed sound power 2000/14/EC	(dB)	106	106	106	106	106	106	106	106	106	106
	8.5	Trailer coupling/type/DIN		Pin	Pin	Pin	Pin	Pin	Pin	Pin	Pin	Pin	Pin